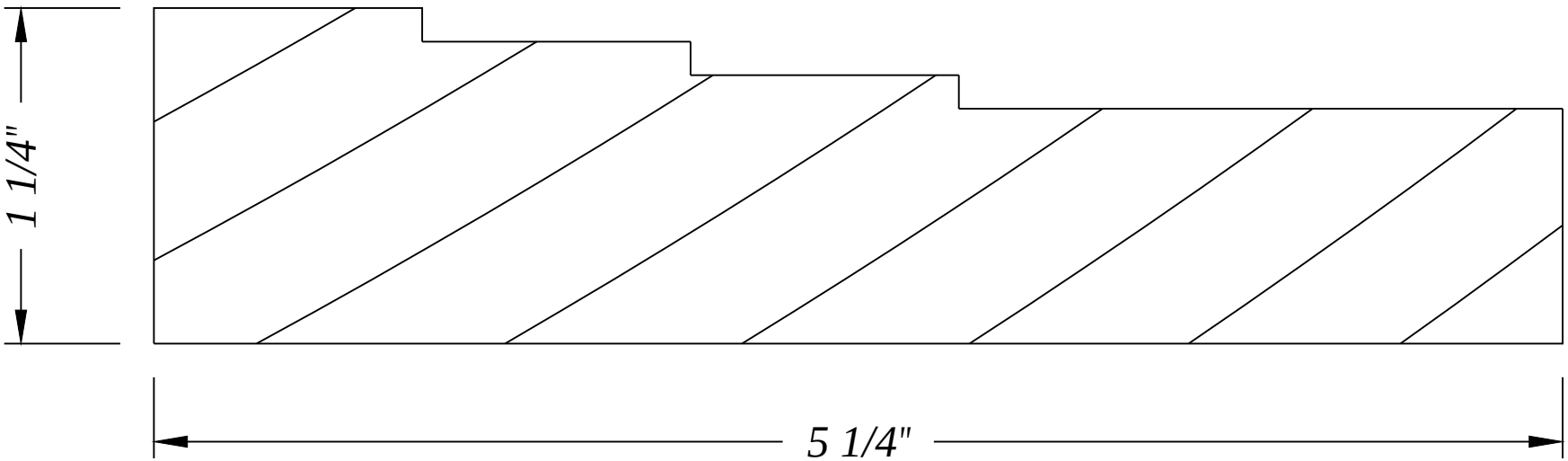
1 1/4"
5 1/4"